DATA SHEET

PDTA114E series

PNP resistor-equipped transistors;
R1 = 10 kΩ, R2 = 10 kΩ

Product specification 2004 Aug 02
Supersedes data of 2003 Apr 10

Philips
Semiconductors

PHILIPS

PNP resistor-equipped transistors; R1 = 10 kΩ, R2 = 10 kΩ

PDTA114E series

FEATURES

- Built-in bias resistors
- Simplified circuit design
- Reduction of component count
- Reduced pick and place costs.

APPLICATIONS

- General purpose switching and amplification
- Inverter and interface circuits
- Circuit driver.

QUICK REFERENCE DATA

SYMBOL	PARAMETER	TYP.	MAX.	UNIT
V_{CEO}	collector-emitter voltage	–	–50	V
I_O	output current (DC)	–	–100	mA
R1	bias resistor	10	–	kΩ
R2	bias resistor	10	–	kΩ

DESCRIPTION

PNP resistor-equipped transistor (see “Simplified outline, symbol and pinning” for package details).

PRODUCT OVERVIEW

TYPE NUMBER	PACKAGE		MARKING CODE	NPN COMPLEMENT
	PHILIPS	EIAJ		
PDTA114EE	SOT416	SC-75	03	PDTC114EE
PDTA114EEF	SOT490	SC-89	03	PDTC114EEF
PDTA114EK	SOT346	SC-59	03	PDTC114EK
PDTA114EM	SOT883	SC-101	E5	PDTC114EM
PDTA114ES	SOT54 (TO-92)	SC-43	TA114E	PDTC114ES
PDTA114ET	SOT23	–	*03[1]	PDTC114ET
PDTA114EU	SOT323	SC-70	*03[1]	PDTC114EU

Note

1. * = p: Made in Hong Kong.
   * = t: Made in Malaysia.
   * = W: Made in China.

PNP resistor-equipped transistors; R1 = 10 kΩ, R2 = 10 kΩ

PDTA114E series

SIMPLIFIED OUTLINE, SYMBOL AND PINNING

TYPE NUMBER	SIMPLIFIED OUTLINE AND SYMBOL	PINNING	
		PIN	DESCRIPTION
PDTA114ES	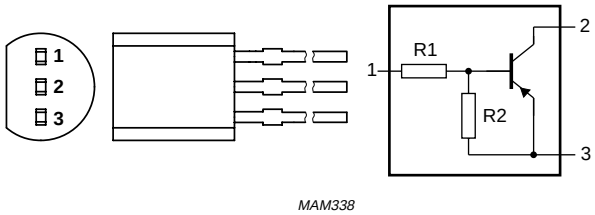 MAM338	1 2 3	base collector emitter
PDTA114EE PDTA114EEF PDTA114EK PDTA114ET PDTA114EU	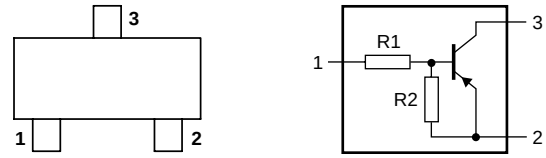 Top view MDB271	1 2 3	base emitter collector
PDTA114EM	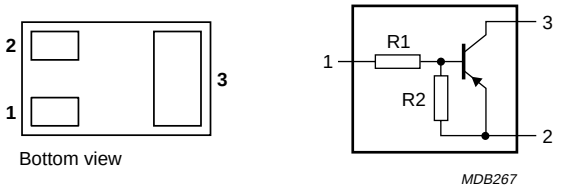 Bottom view MDB267	1 2 3	base emitter collector

LIMITING VALUES

In accordance with the Absolute Maximum Rating System (IEC 60134).

SYMBOL	PARAMETER	CONDITIONS	MIN.	MAX.	UNIT
V_{CBO}	collector-base voltage	open emitter	–	–50	V
V_{CEO}	collector-emitter voltage	open base	–	–50	V
V_{EBO}	emitter-base voltage	open collector	–	–10	V
V_I	input voltage				
	positive		–	+10	V
	negative		–	–40	V
I_O	output current (DC)		–	–100	mA
I_{CM}	peak collector current		–	–100	mA
P_{tot}	total power dissipation	$T_{amb} \leq 25$ °C			
	SOT54	note 1	–	500	mW
	SOT23	note 1	–	250	mW
	SOT346	note 1	–	250	mW
	SOT323	note 1	–	200	mW
	SOT416	note 1	–	150	mW
	SOT490	notes 1 and 2	–	250	mW
	SOT883	notes 2 and 3	–	250	mW
T_{stg}	storage temperature		–65	+150	°C
T_j	junction temperature		–	150	°C
T_{amb}	operating ambient temperature		–65	+150	°C

Notes

1. Refer to standard mounting conditions.
2. Reflow soldering is the only recommended soldering method.
3. Refer to SOT883 standard mounting conditions; FR4 with 60 μm copper strip line.

THERMAL CHARACTERISTICS

SYMBOL	PARAMETER	CONDITIONS	VALUE	UNIT
$R_{th\ j\text{-}a}$	thermal resistance from junction to ambient	in free air		
	SOT54	note 1	250	K/W
	SOT23	note 1	500	K/W
	SOT346	note 1	500	K/W
	SOT323	note 1	625	K/W
	SOT416	note 1	833	K/W
	SOT490	notes 1 and 2	500	K/W
	SOT883	notes 2 and 3	500	K/W

Notes

1. Refer to standard mounting conditions.
2. Reflow soldering is the only recommended soldering method.
3. Refer to SOT883 standard mounting conditions; FR4 with 60 μm copper strip line.

CHARACTERISTICS

T_{amb} = 25 °C unless otherwise specified.

SYMBOL	PARAMETER	CONDITIONS	MIN.	TYP.	MAX.	UNIT
I_{CBO}	collector-base cut-off current	V_{CB} = –50 V; I_E = 0	–	–	–100	nA
I_{CEO}	collector-emitter cut-off current	V_{CE} = –30 V; I_B = 0	–	–	–1	µA
		V_{CE} = –30 V; I_B = 0; T_j = 150 °C	–	–	–50	µA
I_{EBO}	emitter-base cut-off current	V_{EB} = –5 V; I_C = 0	–	–	–400	µA
h_{FE}	DC current gain	V_{CE} = –5 V; I_C = –5 mA	30	–	–	
V_{CEsat}	collector-emitter saturation voltage	I_C = –10 mA; I_B = –0.5 mA	–	–	–150	mV
$V_{i(off)}$	input-off voltage	I_C = –100 µA; V_{CE} = –5 V	–	–1.1	–0.8	V
$V_{i(on)}$	input-on voltage	I_C = –10 mA; V_{CE} = –0.3 V	–2.5	–1.8	–	V
R1	input resistor		7	10	13	kΩ
$\frac{R2}{R1}$	resistor ratio		0.8	1	1.2	
C_c	collector capacitance	$I_E = i_e$ = 0; V_{CB} = –10 V; f = 1 MHz	–	–	3	pF

PACKAGE OUTLINES

Plastic surface mounted package; 3 leads **SOT416**

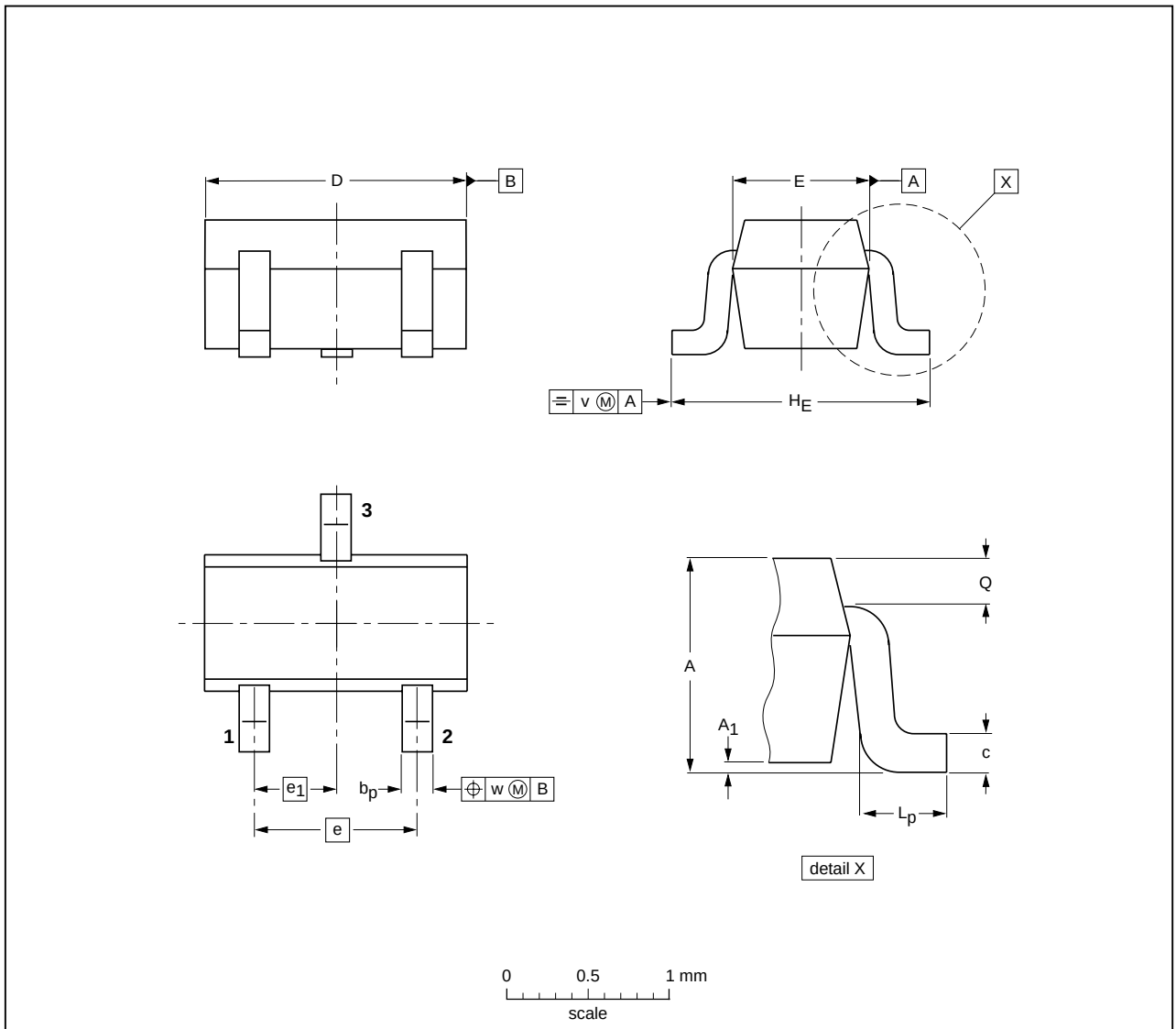

DIMENSIONS (mm are the original dimensions)

UNIT	A	A_1 max	b_p	c	D	E	e	e_1	H_E	L_p	Q	v	w
mm	0.95 0.60	0.1	0.30 0.15	0.25 0.10	1.8 1.4	0.9 0.7	1	0.5	1.75 1.45	0.45 0.15	0.23 0.13	0.2	0.2

OUTLINE VERSION	REFERENCES				EUROPEAN PROJECTION	ISSUE DATE
	IEC	JEDEC	EIAJ			
SOT416			SC-75			97-02-28

Plastic surface mounted package; 3 leads **SOT490**

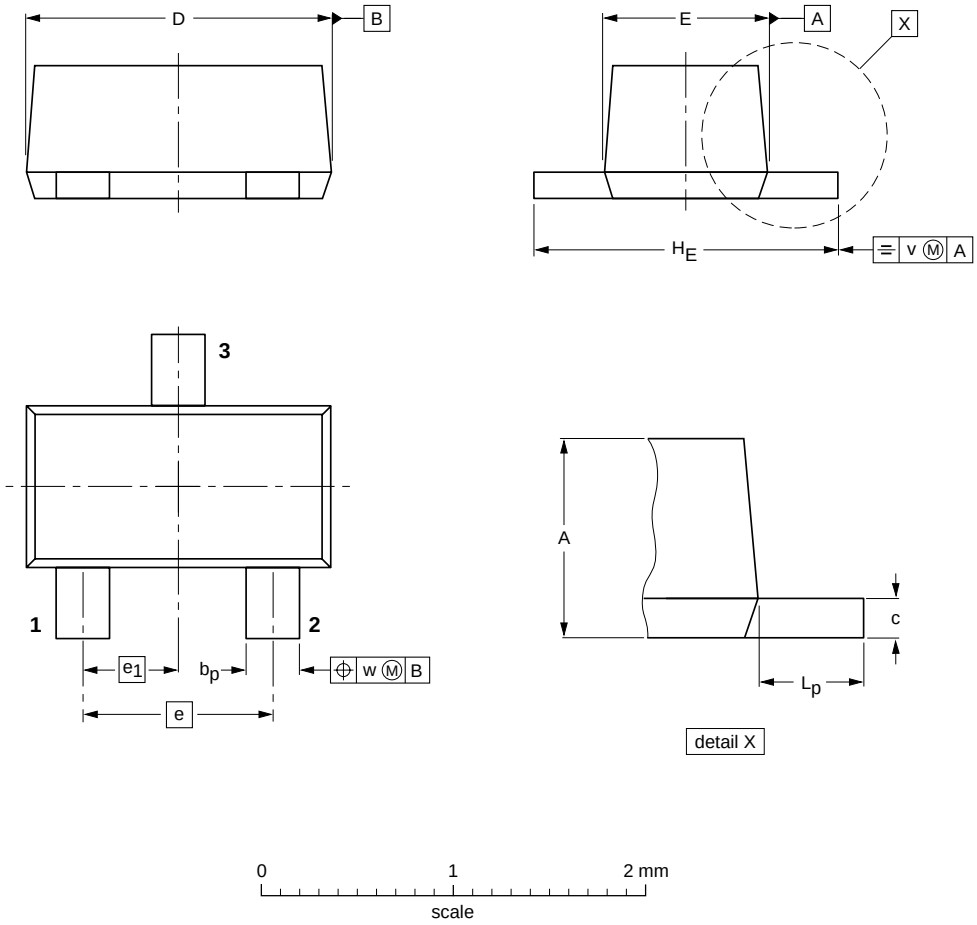

DIMENSIONS (mm are the original dimensions)

UNIT	A	b_p	c	D	E	e	e_1	H_E	L_p	v	w
mm	0.8 0.6	0.33 0.23	0.2 0.1	1.7 1.5	0.95 0.75	1.0	0.5	1.7 1.5	0.5 0.3	0.1	0.1

OUTLINE VERSION	REFERENCES				EUROPEAN PROJECTION	ISSUE DATE
	IEC	JEDEC	EIAJ			
SOT490			SC-89			98-10-23

Plastic surface mounted package; 3 leads **SOT346**

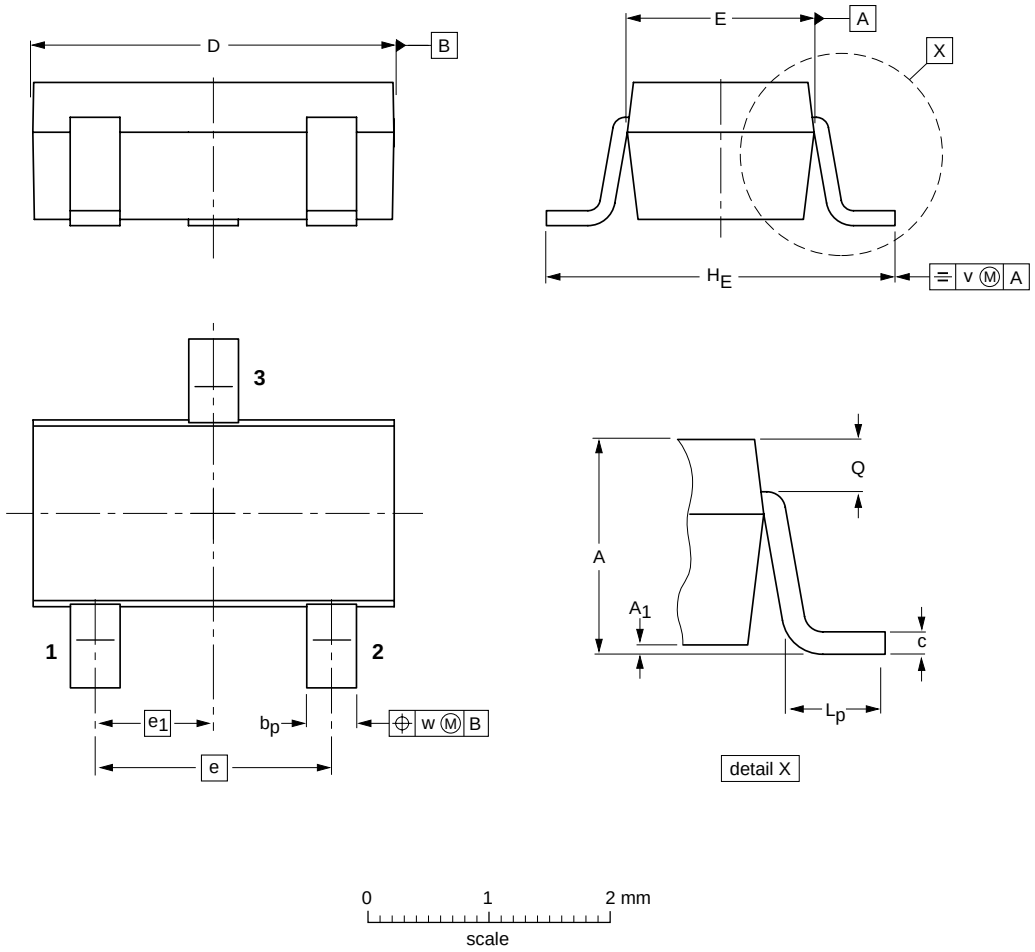

DIMENSIONS (mm are the original dimensions)

UNIT	A	A_1	b_p	c	D	E	e	e_1	H_E	L_p	Q	v	w
mm	1.3 1.0	0.1 0.013	0.50 0.35	0.26 0.10	3.1 2.7	1.7 1.3	1.9	0.95	3.0 2.5	0.6 0.2	0.33 0.23	0.2	0.2

OUTLINE VERSION	REFERENCES				EUROPEAN PROJECTION	ISSUE DATE
	IEC	JEDEC	EIAJ			
SOT346		TO-236	SC-59			98-07-17

Leadless ultra small plastic package; 3 solder lands; body 1.0 x 0.6 x 0.5 mm **SOT883**

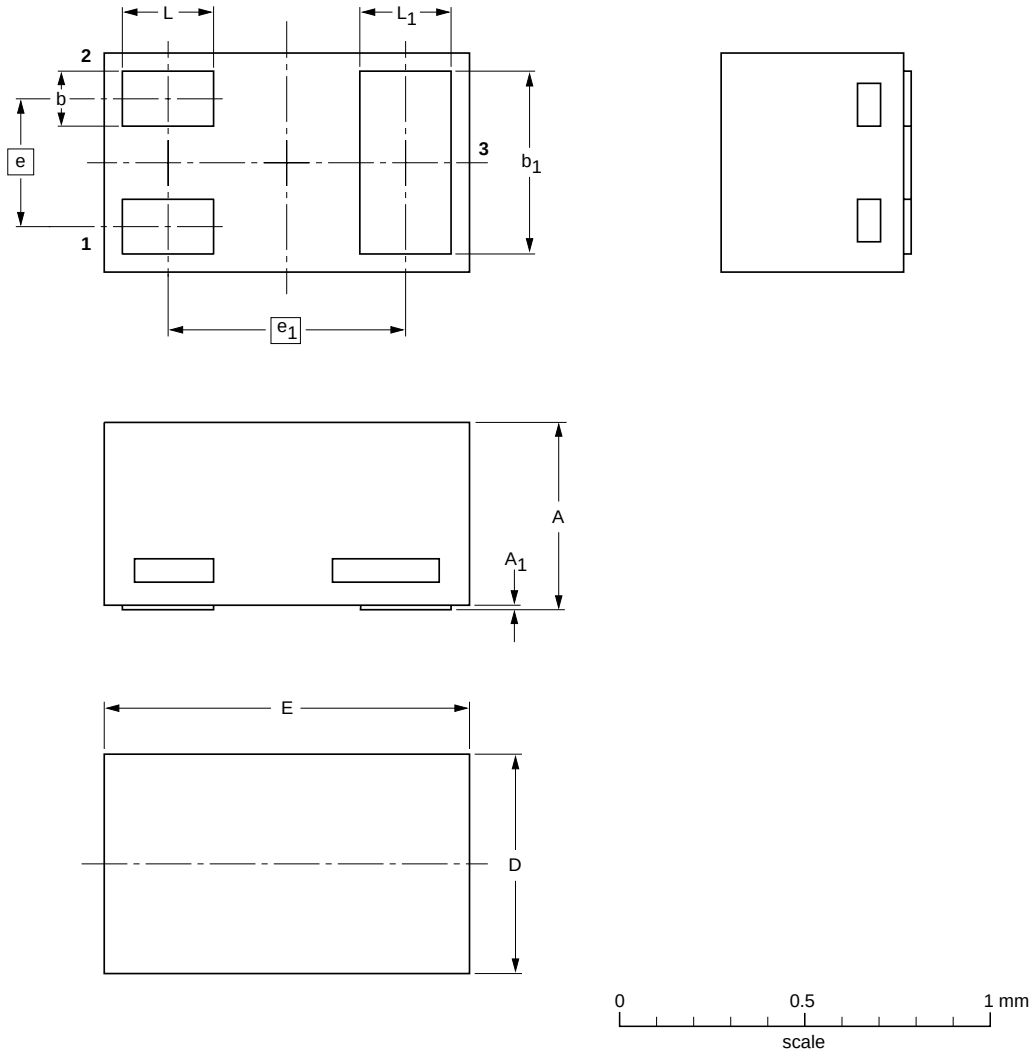

DIMENSIONS (mm are the original dimensions)

UNIT	A(1)	A_1 max.	b	b_1	D	E	e	e_1	L	L_1
mm	0.50 0.46	0.03	0.20 0.12	0.55 0.47	0.62 0.55	1.02 0.95	0.35	0.65	0.30 0.22	0.30 0.22

Note

1. Including plating thickness

OUTLINE VERSION	REFERENCES				EUROPEAN PROJECTION	ISSUE DATE
	IEC	JEDEC	JEITA			
SOT883			SC-101			~~03-02-05~~ 03-04-03

Plastic single-ended leaded (through hole) package; 3 leads **SOT54**

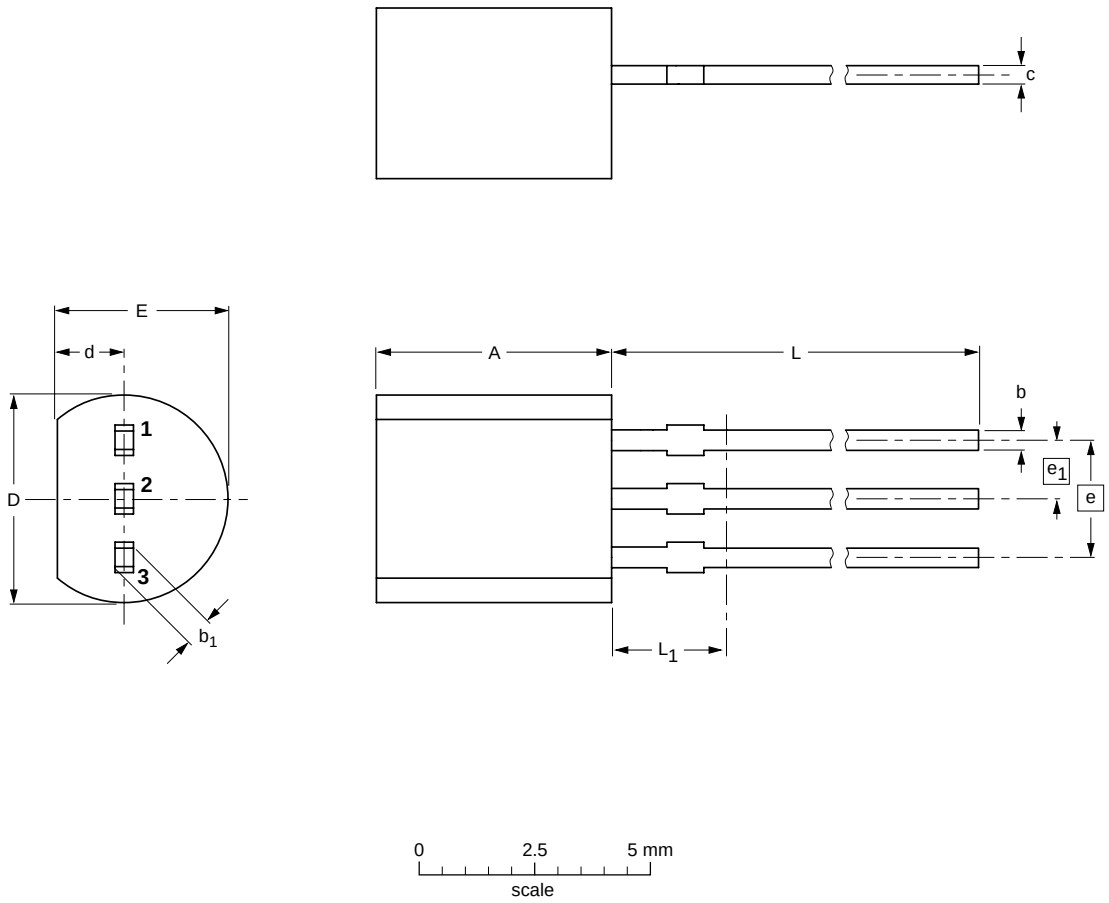

DIMENSIONS (mm are the original dimensions)

UNIT	A	b	b_1	c	D	d	E	e	e_1	L	L_1 (1) max.
mm	5.2 5.0	0.48 0.40	0.66 0.55	0.45 0.38	4.8 4.4	1.7 1.4	4.2 3.6	2.54	1.27	14.5 12.7	2.5

Note

1. Terminal dimensions within this zone are uncontrolled to allow for flow of plastic and terminal irregularities.

OUTLINE VERSION	REFERENCES				EUROPEAN PROJECTION	ISSUE DATE
	IEC	JEDEC	JEITA			
SOT54		TO-92	SC-43A			~~97-02-28~~ 04-06-28

Plastic surface mounted package; 3 leads **SOT23**

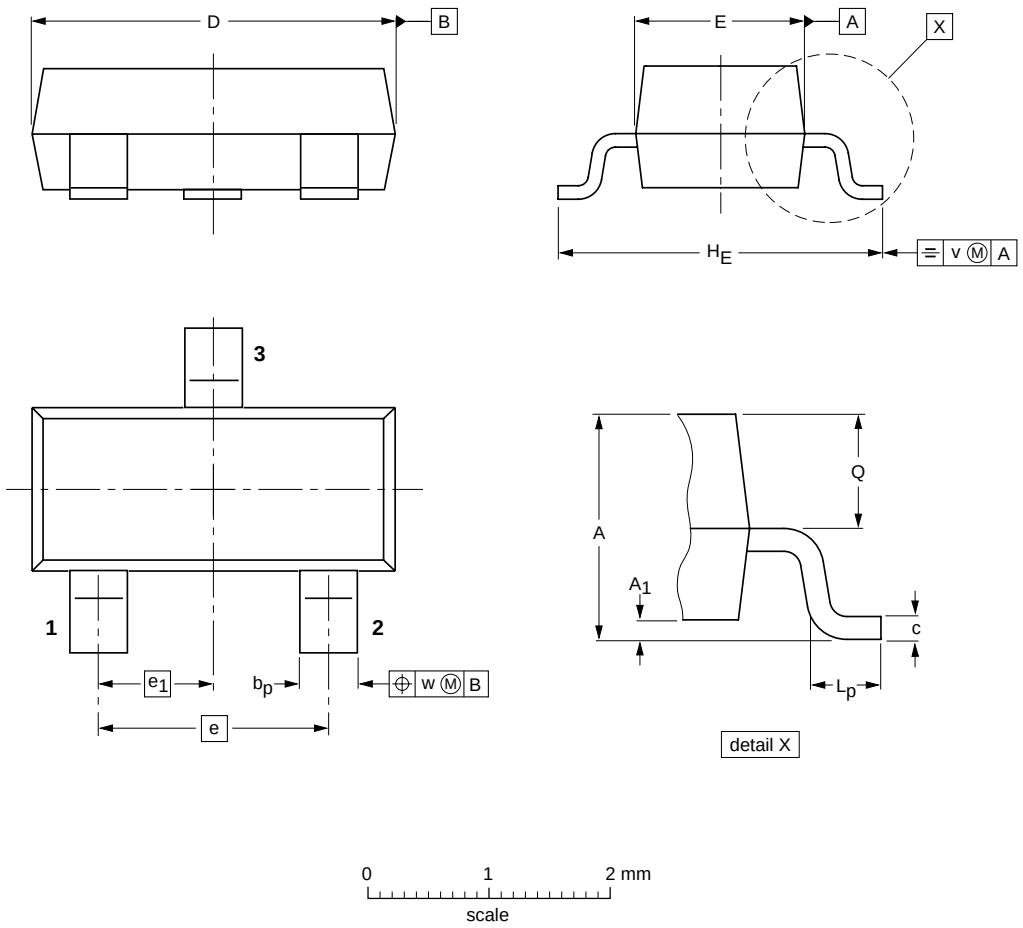

DIMENSIONS (mm are the original dimensions)

UNIT	A	A_1 max.	b_p	c	D	E	e	e_1	H_E	L_p	Q	v	w
mm	1.1 0.9	0.1	0.48 0.38	0.15 0.09	3.0 2.8	1.4 1.2	1.9	0.95	2.5 2.1	0.45 0.15	0.55 0.45	0.2	0.1

OUTLINE VERSION	REFERENCES				EUROPEAN PROJECTION	ISSUE DATE
	IEC	JEDEC	EIAJ			
SOT23		TO-236AB				~~97-02-28~~ 99-09-13

Plastic surface mounted package; 3 leads **SOT323**

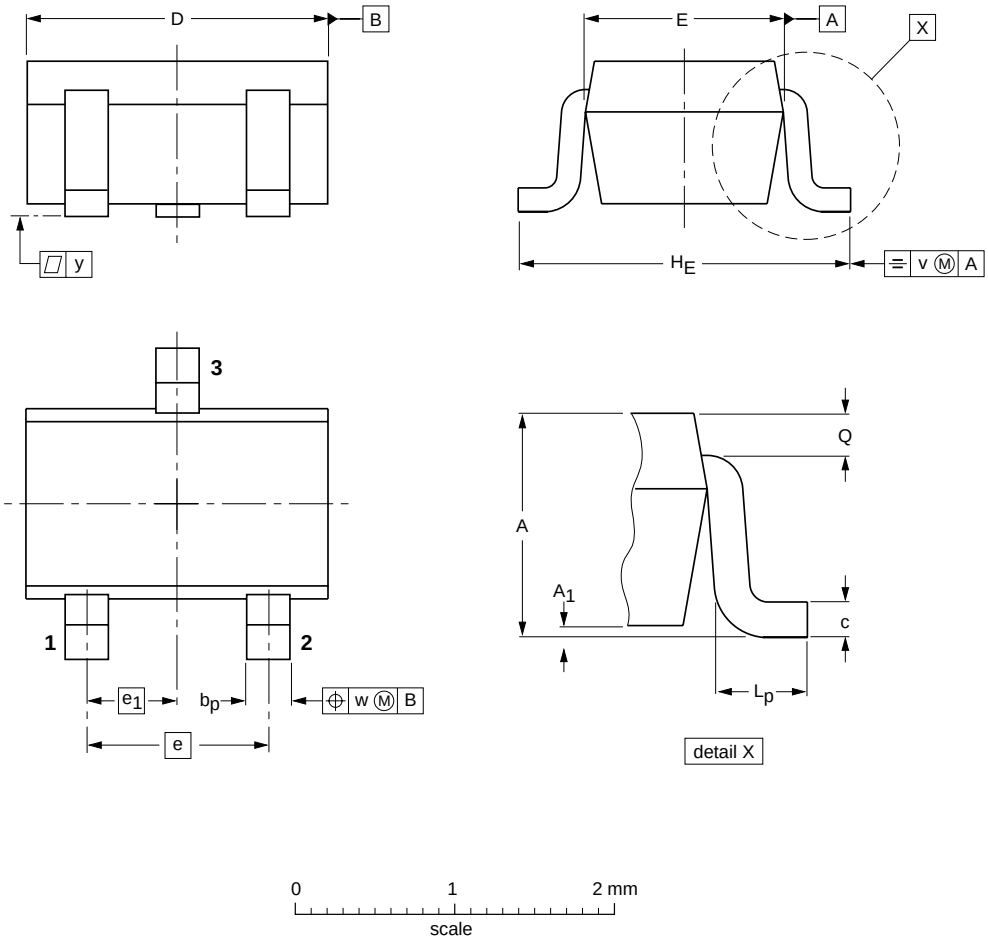

DIMENSIONS (mm are the original dimensions)

UNIT	A	A_1 max	b_p	c	D	E	e	e_1	H_E	L_p	Q	v	w
mm	1.1 0.8	0.1	0.4 0.3	0.25 0.10	2.2 1.8	1.35 1.15	1.3	0.65	2.2 2.0	0.45 0.15	0.23 0.13	0.2	0.2

OUTLINE VERSION	REFERENCES				EUROPEAN PROJECTION	ISSUE DATE
	IEC	JEDEC	EIAJ			
SOT323			SC-70			97-02-28

DATA SHEET STATUS

LEVEL	DATA SHEET STATUS(1)	PRODUCT STATUS(2)(3)	DEFINITION
I	Objective data	Development	This data sheet contains data from the objective specification for product development. Philips Semiconductors reserves the right to change the specification in any manner without notice.
II	Preliminary data	Qualification	This data sheet contains data from the preliminary specification. Supplementary data will be published at a later date. Philips Semiconductors reserves the right to change the specification without notice, in order to improve the design and supply the best possible product.
III	Product data	Production	This data sheet contains data from the product specification. Philips Semiconductors reserves the right to make changes at any time in order to improve the design, manufacturing and supply. Relevant changes will be communicated via a Customer Product/Process Change Notification (CPCN).

Notes

1. Please consult the most recently issued data sheet before initiating or completing a design.
2. The product status of the device(s) described in this data sheet may have changed since this data sheet was published. The latest information is available on the Internet at URL http://www.semiconductors.philips.com.
3. For data sheets describing multiple type numbers, the highest-level product status determines the data sheet status.

DEFINITIONS

Short-form specification — The data in a short-form specification is extracted from a full data sheet with the same type number and title. For detailed information see the relevant data sheet or data handbook.

Limiting values definition — Limiting values given are in accordance with the Absolute Maximum Rating System (IEC 60134). Stress above one or more of the limiting values may cause permanent damage to the device. These are stress ratings only and operation of the device at these or at any other conditions above those given in the Characteristics sections of the specification is not implied. Exposure to limiting values for extended periods may affect device reliability.

Application information — Applications that are described herein for any of these products are for illustrative purposes only. Philips Semiconductors make no representation or warranty that such applications will be suitable for the specified use without further testing or modification.

DISCLAIMERS

Life support applications — These products are not designed for use in life support appliances, devices, or systems where malfunction of these products can reasonably be expected to result in personal injury. Philips Semiconductors customers using or selling these products for use in such applications do so at their own risk and agree to fully indemnify Philips Semiconductors for any damages resulting from such application.

Right to make changes — Philips Semiconductors reserves the right to make changes in the products - including circuits, standard cells, and/or software - described or contained herein in order to improve design and/or performance. When the product is in full production (status ‘Production’), relevant changes will be communicated via a Customer Product/Process Change Notification (CPCN). Philips Semiconductors assumes no responsibility or liability for the use of any of these products, conveys no licence or title under any patent, copyright, or mask work right to these products, and makes no representations or warranties that these products are free from patent, copyright, or mask work right infringement, unless otherwise specified.

Philips Semiconductors – a worldwide company

Contact information

For additional information please visit **http://www.semiconductors.philips.com**. Fax: **+31 40 27 24825**
For sales offices addresses send e-mail to: **sales.addresses@www.semiconductors.philips.com**.

© Koninklijke Philips Electronics N.V. 2004 SCA76

All rights are reserved. Reproduction in whole or in part is prohibited without the prior written consent of the copyright owner.

The information presented in this document does not form part of any quotation or contract, is believed to be accurate and reliable and may be changed without notice. No liability will be accepted by the publisher for any consequence of its use. Publication thereof does not convey nor imply any license under patent- or other industrial or intellectual property rights.

Printed in The Netherlands R75/08/pp14 Date of release: 2004 Aug 02 Document order number: 9397 750 13645

Let's make things better.

Philips
Semiconductors

PHILIPS